Type TTM20Au

In-floor Wedge System

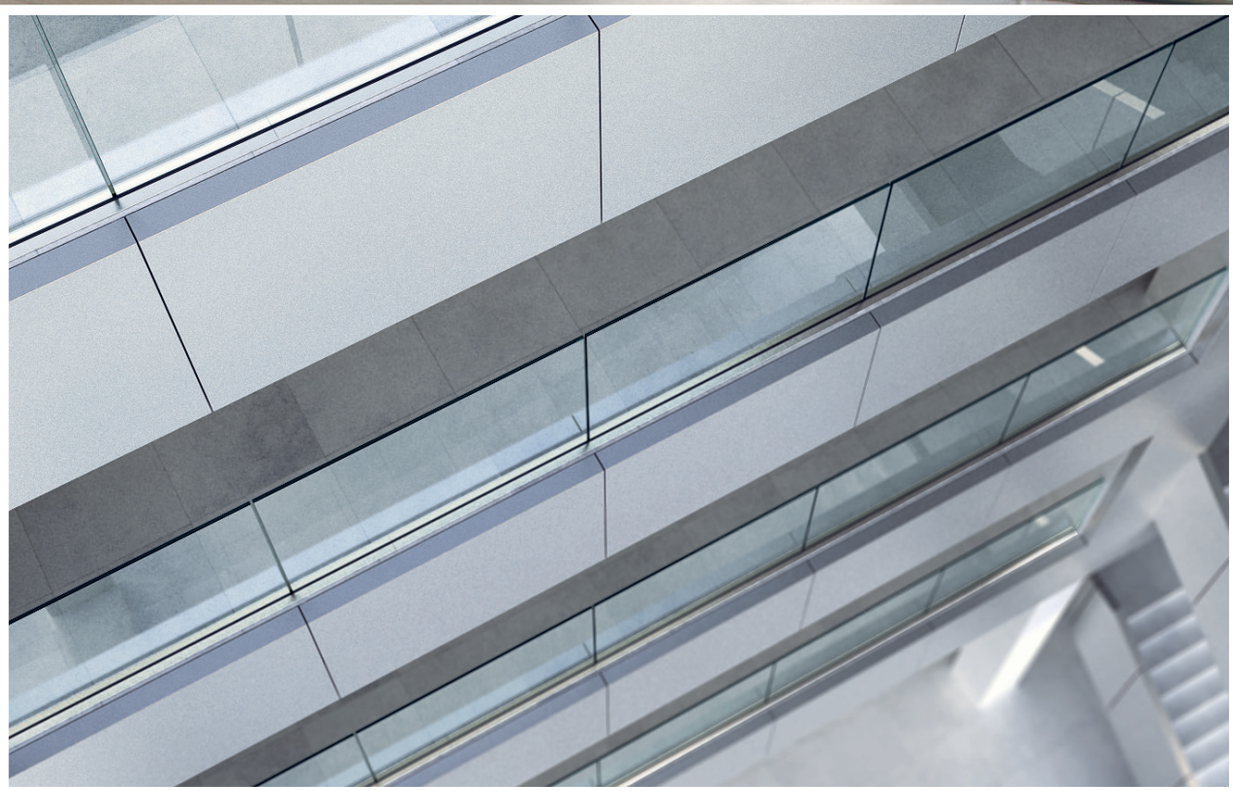

In-floor Wedge system

Save time and money with this new system!
Floor profile supplied in precut and drilled, at three meter length.
Specified glass is 88,4 and maximum height at 1200mm.

Type **TTM20Au**

Technical specifications

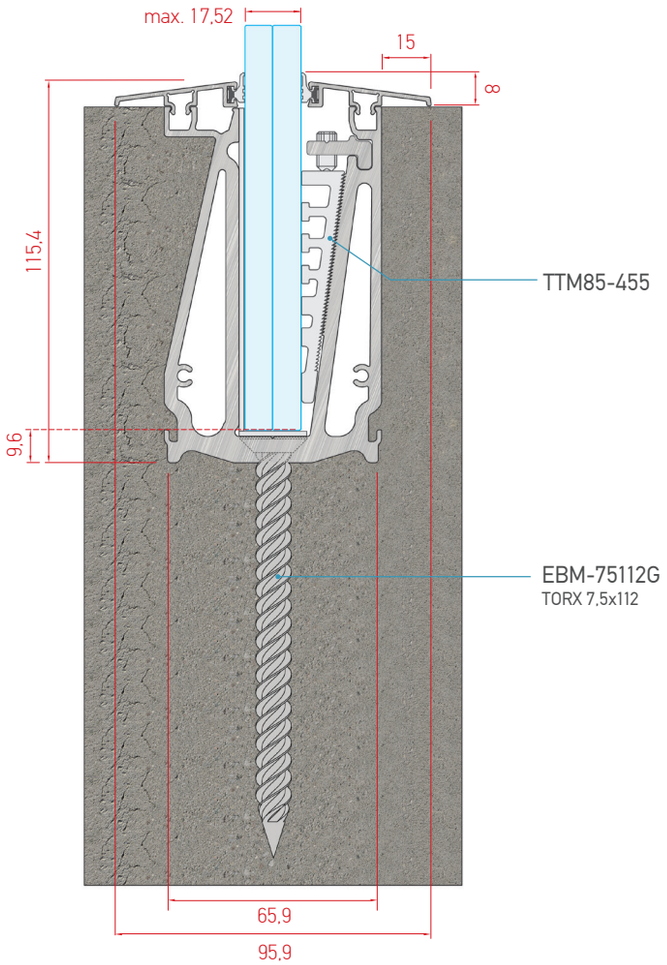

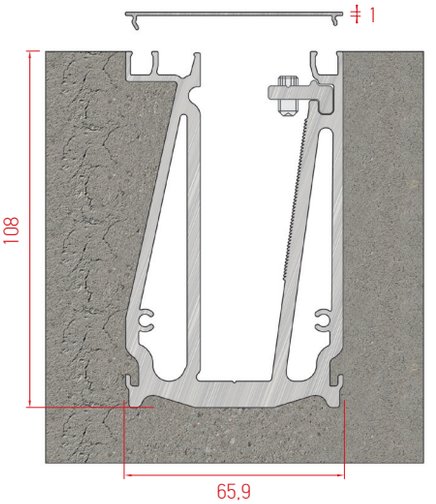

Glass section TTM20Au
16mm
Min. 16.76mm
Max. 17.52mm
Recommended glass
17.52mm (8-1.52-8)

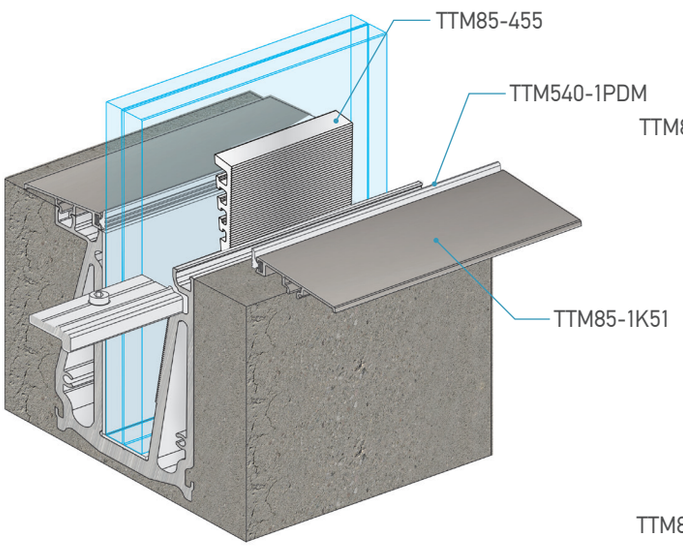

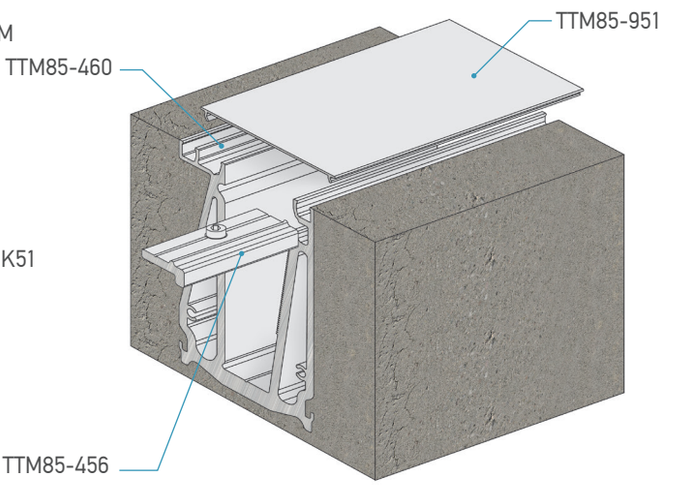

Supporting base assembly

Standard supporting base type TTM20Au assembly for glasses with a length of 1000mm, connected back-to-back

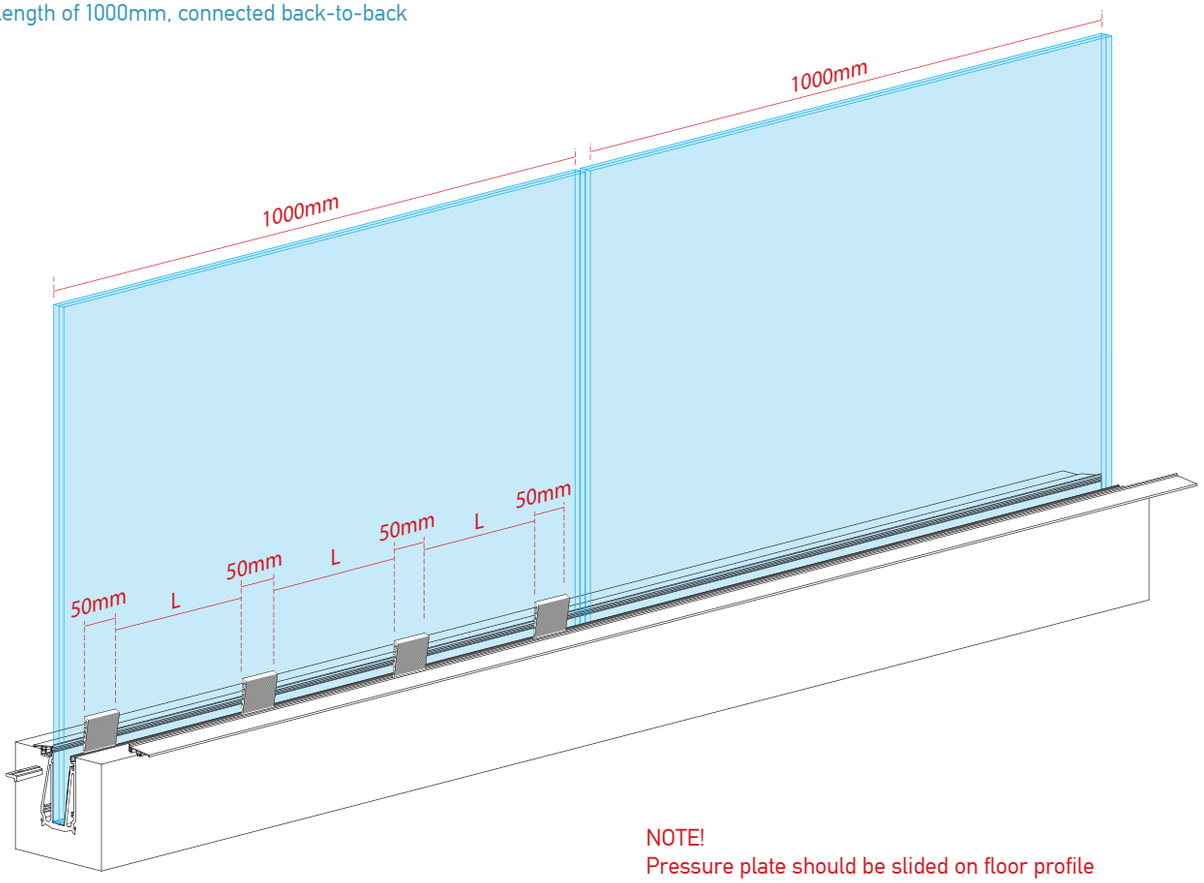

NOTE!
Pressure plate should be slided on floor profile before final fixing.

Recommended number of bases / m	8mm+4PVB+8mm (88.4)			
	Glass height	Handrail	No. of bases / m	L
	600mm	-	4	265mm
		TTM85-200	4	265mm
		TTM85-201	4	265mm
	1000mm	-	5	190mm
		TTM85-200	4	265mm
		TTM85-201	4	265mm
	1200mm	-	5	190mm
		TTM85-200	5	190mm
		TTM85-201	5	190mm

The stated results are only indicative and do not guarantee the system's durability since they are not a result of a structural study

Type **TTM20Au**

Installation step by step

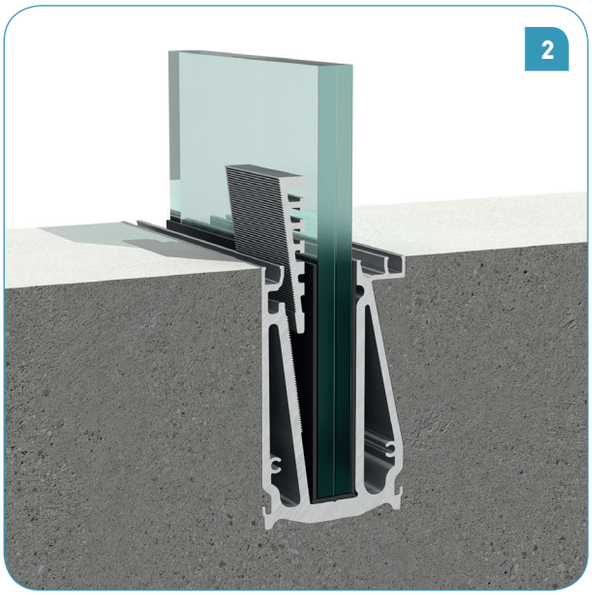

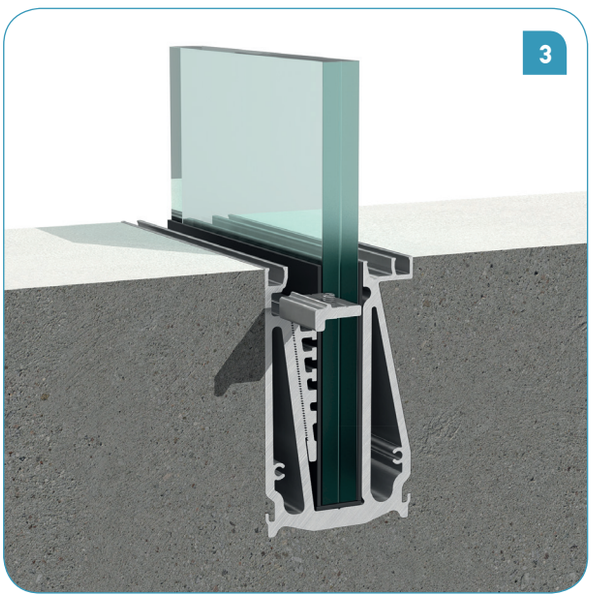

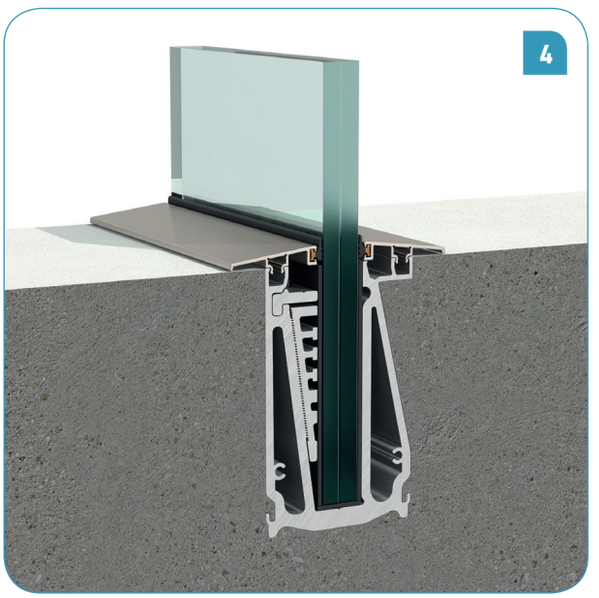

Profiles & accessories

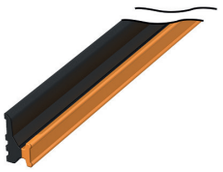

Slug gasket

Code	TTM540-1PD
Package	200 m

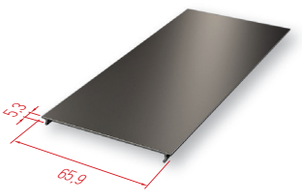

Cover for in-floor quide

Code	TTM85-1K51
Weight	235 gr/m
Length	6 m

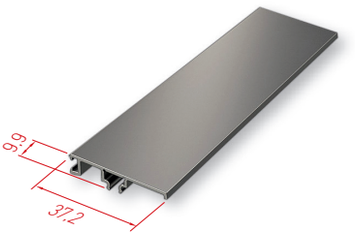

Base cover

Code	TTM85-951
Weight	216 gr/m
Length	6 m

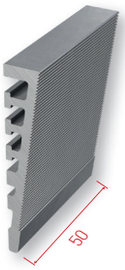

Aluminium wedge

Code	TTM85-455
Package	20 pcs.

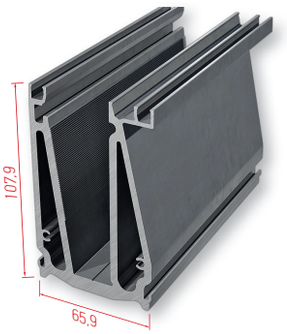

Drainase base

Code	TTM85-460
Length	3 m

* Available in three meter pre-cut and pierced.
Disponible en 3 metres percé

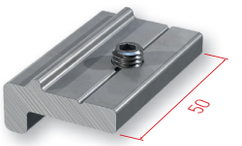

Pressure plate restrainor

Code	TTM85-456
Package	20 pcs.

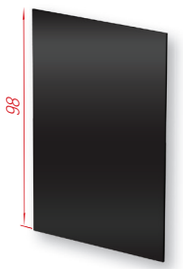

PVC sheet 1,5mm

Code	TTM85-459
Color	Black
Length	2 m

PVC sheet 1,5mm

Code	TTM85-458
Color	Black
Length	2 m

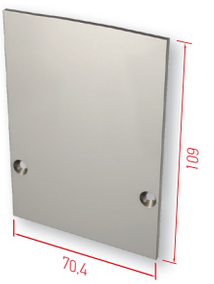

Cap

Code	TTM85-450
Package	20 pcs.